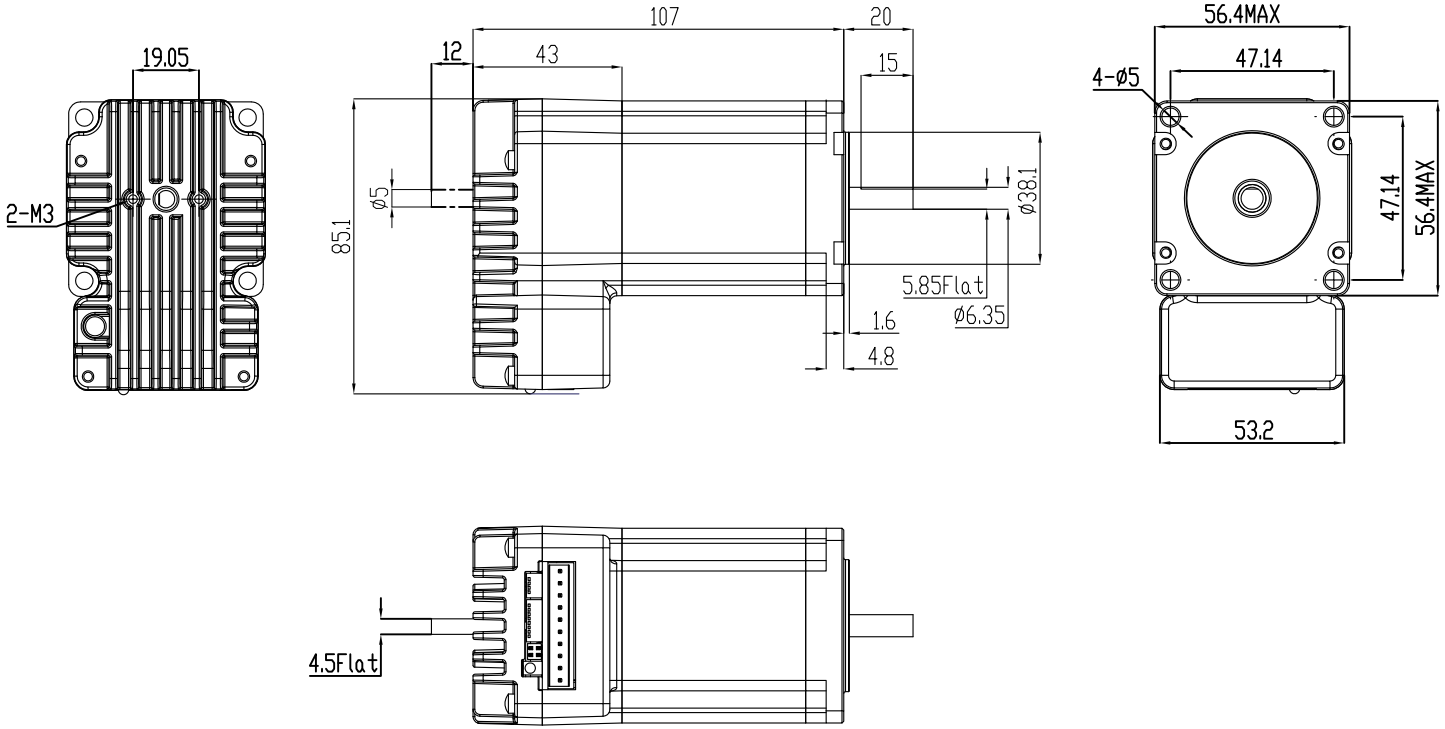
19.05
2-M3
107
20
12
43
15
85.1
ø5
ø38.1
5.85Flat
ø6.35
1.6
4.8
56.4MAX
47.14
4-ø5
47.14
56.4MAX
53.2
4.5Flat

STM23R-3ND