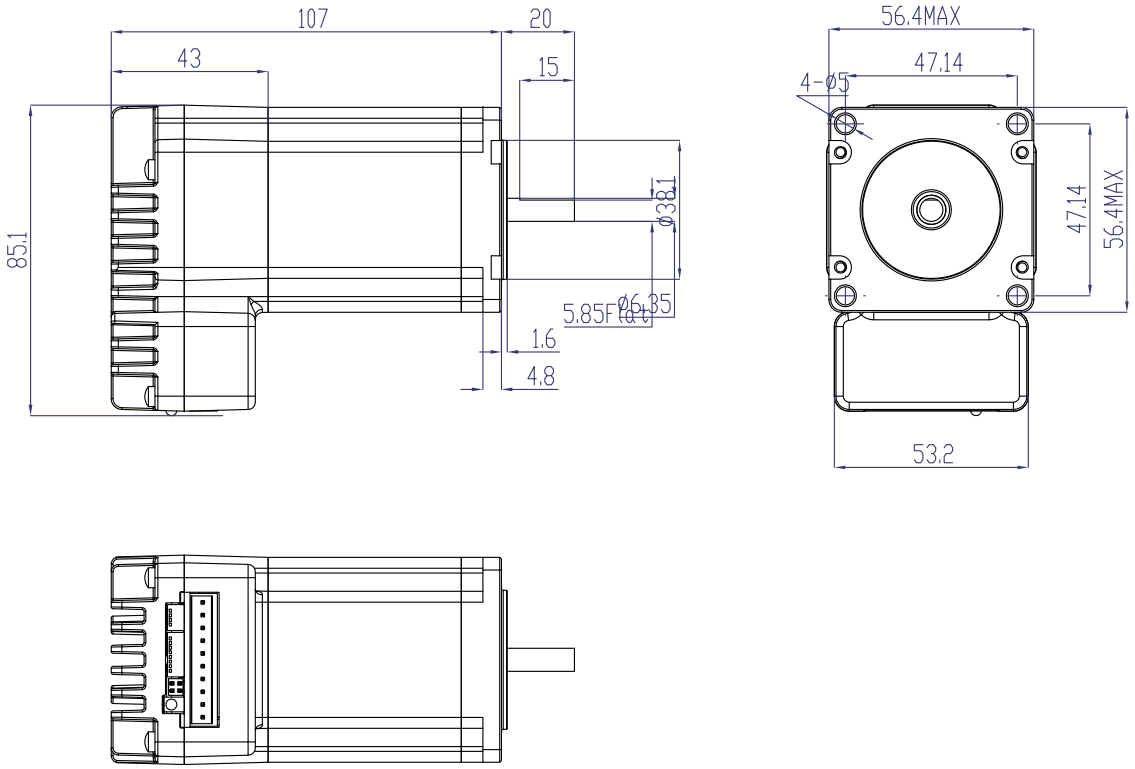
107
20
43
15
85.1
Ø38.1
5.85F
Ø6.35
1.6
4.8
56.4MAX
47.14
4-Ø5
47.14
56.4MAX
53.2

					STM23R-3NN	