环保物料

TEL:0769-82001899

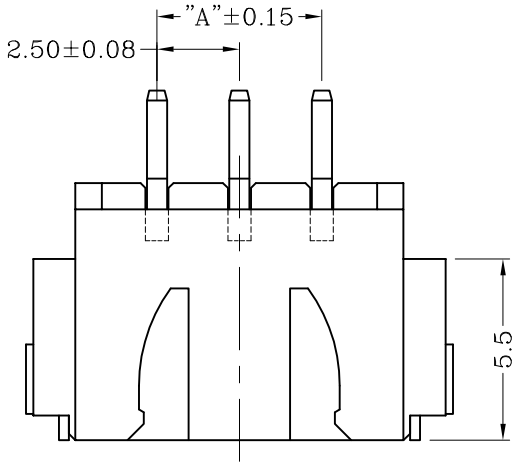

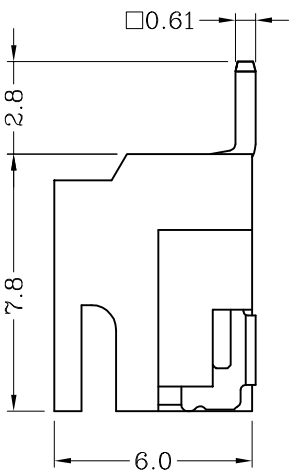

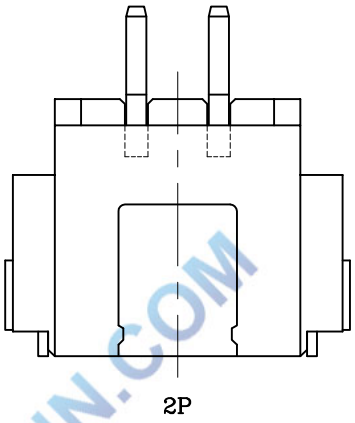

SPECIFICATIONS

Voltage rating: 250V AC, DC
Current rating: 3A, AC, DC
Withstanding Voltage: 1000V AC/minute
Insulation resistance:1000MΩ min
Temperature range: -25°C~+85°C
Contact resistance: 10mΩ max
WAFER
Housing Material: PA9T UL 94V0
Pin Material: Phosphor Bronze or Brass
Contact Area Plating: Plated Tin or Plated Gold
Mates with :P2501 series Housing
Poles:02-16P
Part No.: M2501RS-xx-9T-R

R=卷装 无=管装

Pin位数

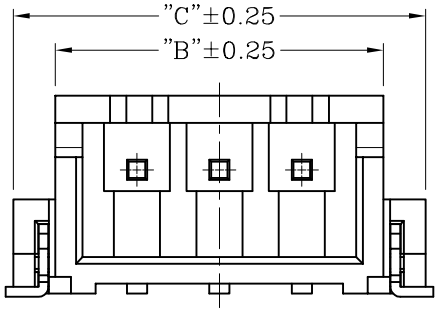

Poles	DIM.A	DIM.B	DIM.C
2	2.50	7.45	10.00
3	5.00	9.95	12.50
4	7.50	12.45	15.00
5	10.00	14.95	17.50
6	12.50	17.45	20.00
7	15.00	19.95	22.50
8	17.50	22.45	25.00
9	20.00	24.95	27.50
10	22.50	27.45	30.00
11	25.00	29.95	32.50
12	27.50	32.45	35.00
13	30.00	34.95	37.50
14	32.50	37.45	40.00
15	35.00	39.95	42.50
16	37.50	42.45	45.00

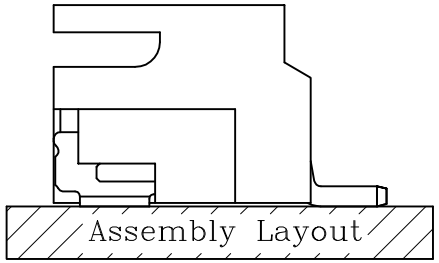

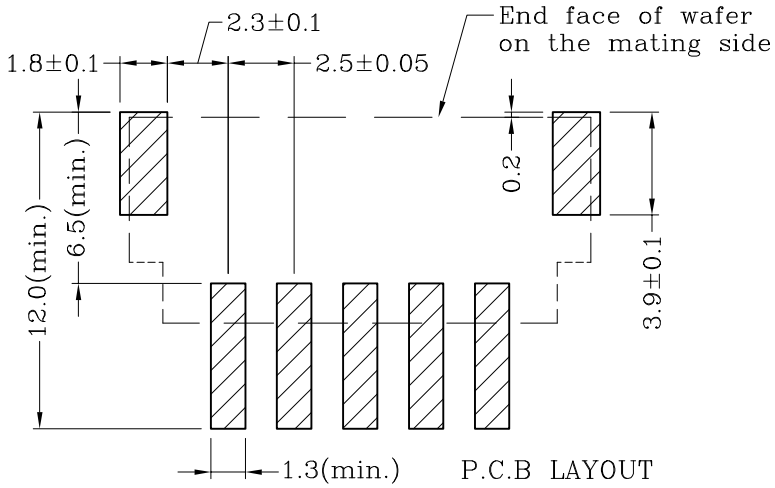

WWW.XFCONN.COM

VER	MODIFICATION	DRAW	DATE
A0			

TOLERANCE UNLESS OTHERWISE

X.	±0.30	X°	±5°
.X	±0.20	.X°	±2°
.XX	±0.08	.XX°	±1°
.XXX	±0.03	.XXX°	±0.5°

DRAWN	CK tan
CHKD	
APPD	
VIEW	

XFCN兴飞连接器有限公司
CONNECTORS XFCN CONNECTORS CO., LTD.

PRODUCT NAME	2.50mm Crimp Style Connectors
PART. NO.	M2501RS-xx-9T

SHEET	1/1
DATE	2010.4.12
UNITS	mm
SCALE	1:1
DWG NO.	009