环保物料

TEL:0769-82001899

Poles	DIM.A	DIM.B
2x2P	6.0	2.0
2x3P	8.0	4.0
2x4P	10.0	6.0
2x5P	12.0	8.0
2x6P	14.0	10.0
2x7P	16.0	12.0
2x8P	18.0	14.0
2x9P	20.0	16.0
2x10P	22.0	18.0
2x11P	24.0	20.0
2x12P	26.0	22.0
2x13P	28.0	24.0
2x14P	30.0	26.0
2x15P	32.0	28.0
2x16P	34.0	30.0
2x17P	36.0	32.0
2x18P	38.0	34.0
2x19P	40.0	36.0
2x20P	42.0	38.0
2x30P	62.0	58.0

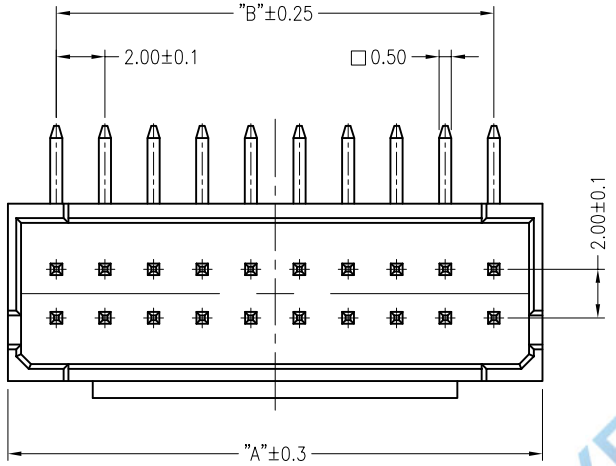

SPECIFICATIONS

1.Voltage rating: 250V AC, DC
2.Current rating: 3A, AC, DC
3.Withstanding Voltage: 1000V AC/minute
4.Insulation resistance:1000MΩ min
5.Temperature range: -25 ° C-+85 ° C
6.Contact resistance: 20mΩ max

WAFER

Housing Material: Nylon46 UL 94V0
Pin Material: Phosphor Bronze or Brass
Contact Area Plating: Plated Tin or Plated Gold
Mates with :P2026 series Housing
Poles:04-60P
Part No.: M2026R-xx-46

Pin位数

WWW.XFCONN.COM

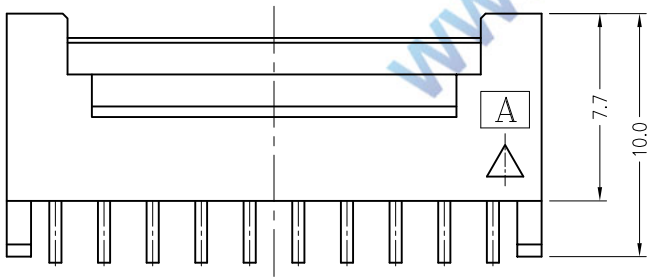

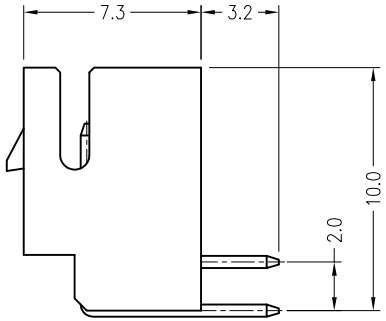

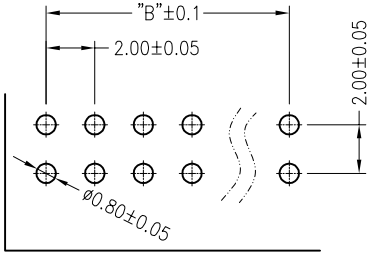

P.C.B LAYOUT

VER	MODIFICATION	DRAW	DATE
A0			

TOLERANCE UNLESS OTHERWISE

X.	±0.30	X°	±5°
.X	±0.20	.X°	±2°
.XX	±0.08	.XX°	±1°
.XXX	±0.03	.XXX°	±0.5°

DRAWN: CK tan
CHKD:
APPD:
VIEW:

XFCN兴飞连接器有限公司
CONNECTORS XFCN CONNECTORS CO., LTD.

PRODUCT NAME: 2.00mm Crimp Style Connectors
PART. NO.: M2026R-2xXX-46

SHEET: 1/1
DATE: 2010. 4. 12
UNITS: mm
SCALE: 1:1
DWG NO.: 009