FILE: MX

REVISIONS				
ZONE	REV	DESCRIPTION	DATE	APPROVED

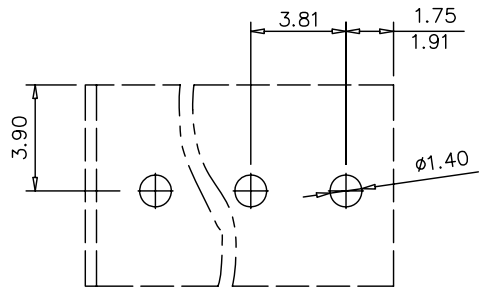

P.C.B. LAYOUT

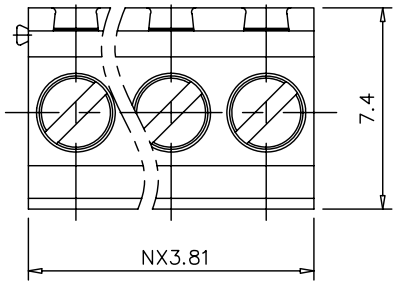

NOTES1:

UL Standard

1.Rated voltage/current : 300V / 10A
2.Torque Value : M2 , 1.77Lb.in
3.Wire Range : 26~16AWG

IEC Standard

1.Rated voltage/current : 130V / 10A
2.Torque Value : M2 , 0.2N.m
3.Wire Range : 0.5~1.0mm^2

NOTES2:

1.Dimension shall be interpreted per
2.Pitch :3.81mm, Poles : N=02~24P
3.Stripping length : 4~5mm
4.Withstanding voltage : AC1250V/1Min
5.Operating temperature: −40°C~+105°C

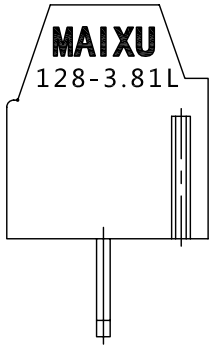

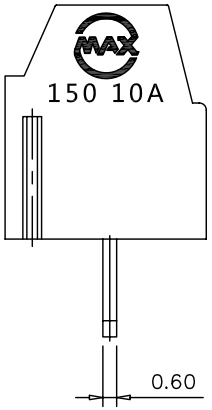

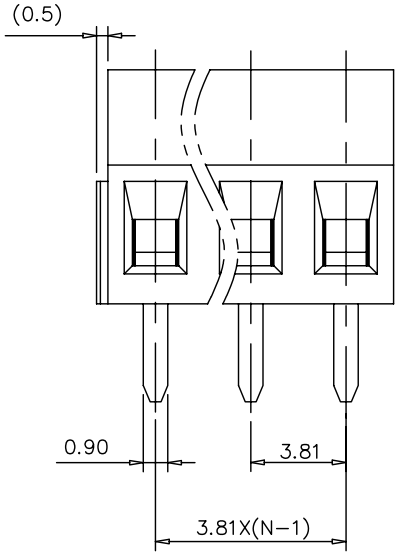

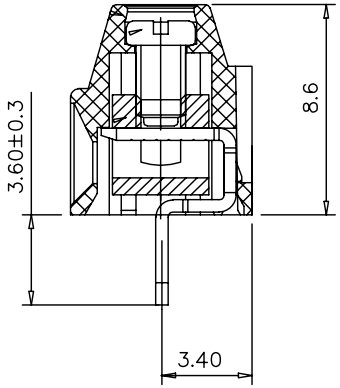

Total Pitch Tolerances in mm									Nominal dimension range in mm									⊥		⌭	—		//
over 0 to 30	over 30 to 53	over 53 to 70	over 70 to 90	over 90 to 115	over 115 to 150	over 150 to 250	over 250 to 350	over 350 to 500	over 0 to 30	over 30 to 53	over 53 to 70	over 70 to 90	over 90 to 115	over 115 to 150	over 150 to 200	over 200 to 250	over 250 to 320	over 0 to 10	over 10	all	over 0 to 100	over 100 to 150	over 150
±0.18	±0.20	±0.25	±0.3	±0.35	±0.44	±0.60	±0.70	±0.85	±0.20	±0.25	±0.30	±0.35	±0.44	±0.55	±0.70	±0.80	±0.90	0.2	0.3	0.3	0.2	0.3	0.5

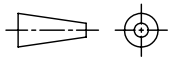

THIRD ANGLE PROJECTION

慈溪市迈旭电子有限公司
MAI XU Cixi Maixu Electronics Co., Ltd.

MX128L-3.81-XXP-XC

CHKD:	/	SIZE	FSCM NO.	DWG NO.	REV
DRFT:	/	MM (INCH)	DO NOT SCALE DRAWING	SHEET	