4611110029036

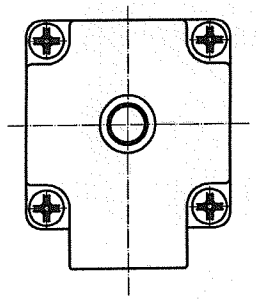

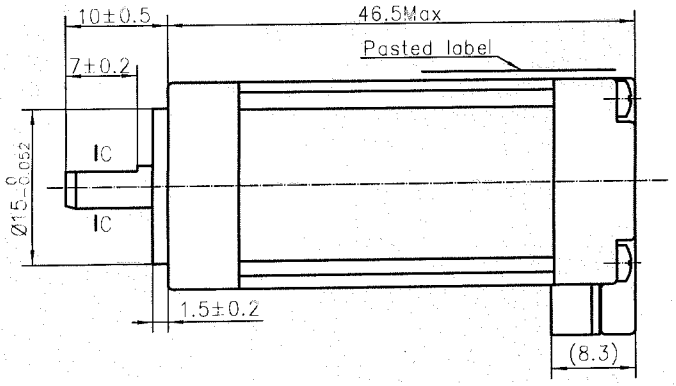

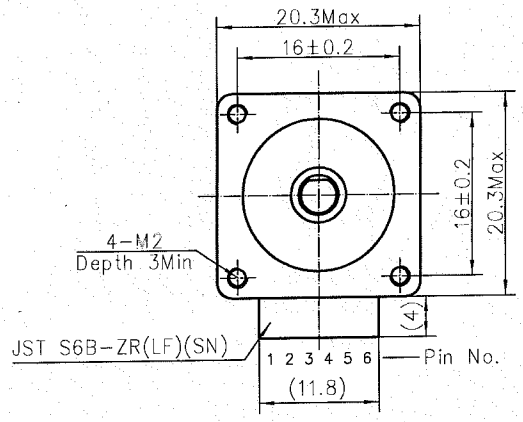

接线图

Wiring Diagram

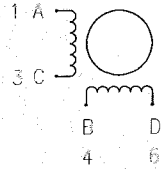

励磁顺序vs.旋转方向

Exciting Sequence vs. Direction of Rotation

CW ↓ ↑ CCW

STEP	A	B	C	D
1	+	+	−	−
2	−	+	+	−
3	−	−	+	+
4	+	−	−	+

从安装面看为顺时针方向

Clockwise view from mouting side

规格 Specifications

1. 相数 Number of Phase	2
2. 步距角 Step Angle	1.8°
3. 额定电压 Rated Voltage	4.8V DC
4. 额定电流 Rated Current	0.6Amp
5. 保持力矩 Holding Torque	58mNm Typ.(Two phase on/rated current)
6. 相电阻 Phase Resistance	8ohm±10%(20°C)
7. 相电感 Phase Inductance	6.1mH±20%(1kHz 1V rms)
8. 转子惯量 Rotor Inertia	4.2gcm^2
9. 电机重量 Motor Weight	0.08kg
10. 绝缘等级 Insulation Class	B(130°C)

C-C

2:1

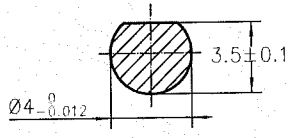

铭牌 Label Detail

MOONS' STEPPING MOTOR
TYPE MS08HY5P4060
XXXXXXXX YY/MM/DD

Work Order 加工单号

Date Format 日期格式

REV.	版本记录 REVISION RECORD	DATE
A	原始版本 Original revision	2018.05.04

Unit: mm

第一角画法 FIRST ANGLE METHOD

未注线性与角度尺寸公差 Tolerances for linear and angular dimensions without individual tolerance indications GB/T 1804-m, equ ISO 2768-1:m

未注形状与位置尺寸公差 Geometrical tolerance for features without individual tolerance indications GB/T 1184-K, equ ISO 2768-2:K

UNLESS OTHERWISE SPECIFIED

	NAMES	SIGNATURE	DATE
批准 Approve			
标准化 Standard			
工艺 Technology			
审核 Check			
设计 Design			

MOONS'

Shanghai Moons' Electric Co., Ltd.

Hybrid Stepping Motor

This ducument is released for information only. Its reproduction in whole or in part or its dissemination to third parties is prohibited. All trademarks and registered trademarks appearing on this document are the property of their respective owners.

Type: MS08HY5P4060 | Rev.A | SCALE 2:1 | Sheet 1 of 1