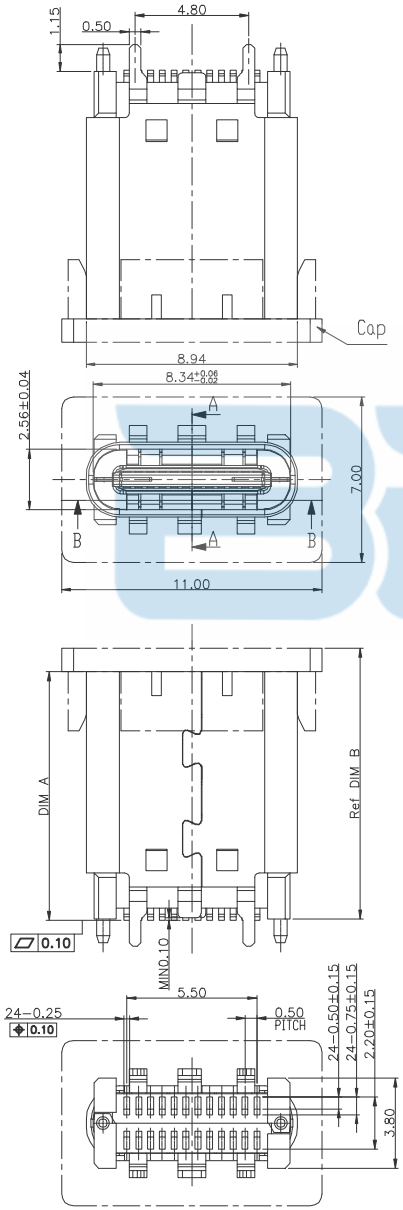

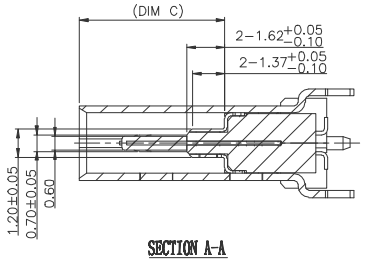

SECTION A-A
SCALE 1:1

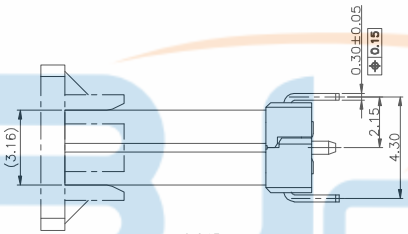

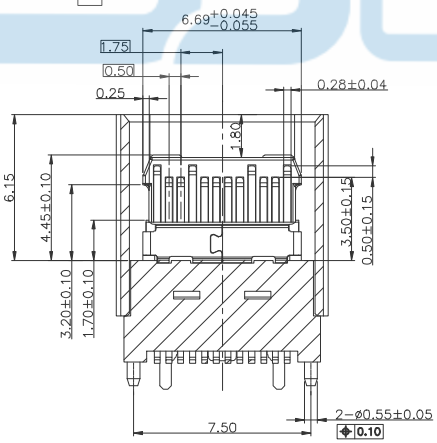

SECTION B-B
SCALE 1:1

P/N:	DIM A	DIM B	DIM C
	10.50	11.5	6.15
	9.30	10.3	4.95
	8.80	9.80	4.45

NOTES:

1.MATERIAL:
MOLDING: LCP UL94 V-0
CONTACT:COPPER ALLOY.
GOLD PLATING ALL OVER 50u" Min NICKEL
AND 100u"Min Tin ALL OVER 50u" Min NICKEL
ON SOLDER AREA
SHELL: SUS304-H,T=0.30±0.03mm
50u" NICKEL PLATING OVER ALL.
SHILD:SUS304-H,T=0.12±0.03mm

2.MECHANICAL:
INSERTION: 5~20N.
EXTRACTION: 8~20N AFTER TEST .
DURABILITY: 10000 CYCLES

3.ELECTRICAL:
CURRENT: 5A FOR VBUS;
1.25A FOR GND PIN.
0.25A FOR OTHER.
VOLTAGE: 20 V MAX
WITHSTANDING VOLTAGE: 100V AC R.M.S
CONTACT RESISTANCE: 40mΩ MAX.
INSULATION RFSISTANCF· 100MΩ MIN

TOLERANCE UNSPECIFIED
. ±0.50
.0 ±0.35
.00 ±0.25
.000 ±0.15
ANGLE ±3.00°
CUSTOMER DRAWING

深圳市步步精科技有限公司

TITLE: TYPE-C 24P 母座 直立式 H=8.8

DRAWN BY:	HMY	SIZE:A4	UNIT:mm	PART NO. - UC.01.62-16-0003	
CHECKED BY:	LYX	SCALE: 1:1		PROJECTION	REV.: D
APPROVED BY:	LJP	DWG . PATH		0285-1	SHEET:1/4

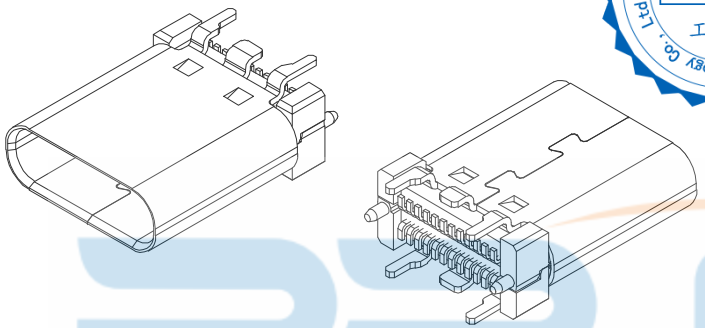

USB TYPE-C FULL-FEATURED RECEPTACLE INTERFACE PIN ASSIGNMENTS

PIN	Signal Name	Description	PIN	Signal Name	Description
A1	GND	Ground return	B12	GND	Ground return
A2	SSTXp1	Positive half of first SuperSpeed TX differential pair	B11	SSRXp1	Positive half of first SuperSpeed RX differential pair
A3	SSTXn1	Negative half of first SuperSpeed TX differential pair	B10	SSRXn1	Negative half of first SuperSpeed RX differential pair
A4	VBUS	Bus Power	B9	VBUS	Bus Power
A5	CC1	Configuration Channel	B8	SBU2	Sideband Use (SBU)
A6	Dp1	Positive half of the USB 2.0 differential pair-Position 1	B7	Dn2	Negative half of the USB 2.0 differential pair-Position 2
A7	Dn1	Negative half of the USB 2.0 differential pair-Position 1	B6	Dp2	Positive half of the USB 2.0 differential pair-Position 2
A8	SBU1	Sideband Use(SBU)	B5	CC2	Configuraation Channel
A9	VBUS	Bus Power	B4	VBUS	Bus Power
A10	SSRXn2	Negative half of second SuperSpeed RX differential pair	B3	SSTXn2	Negative half of second SuperSpeed TX differential pair
A11	SSRXp2	Positive half of second SuperSpeed RX differential pair	B2	SSTXp2	Positive half of second SuperSpeed TX differential pair
A12	GND	Ground return	B1	GND	Ground return

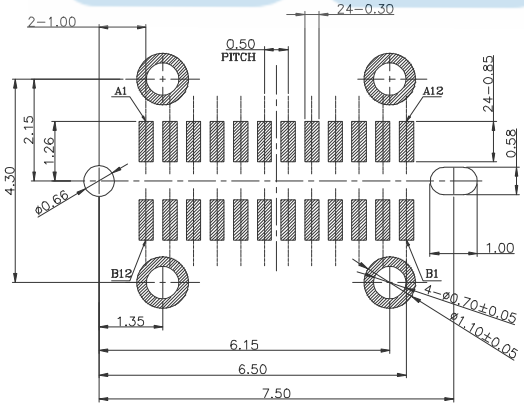

RECOMMENDED P.C.B. LAYOUT (T:1.00mm)
TOLERANCE UNSPECIFIED ±0.05mm
SCALE: 2:1

TOLERANCE UNSPECIFIED . ±0.50 .0 ±0.35 .00 ±0.25 .000 ±0.15 ANGLE ±3.00° CUSTOMER DRAWING		深圳市步步精科技有限公司 TITLE: TYPE-C 24P 母座 直立式 H=8.8			
DRAWN BY:	HMY	SIZE:A4	UNIT:mm	PART NO. UC.01.62-16-0003	
CHECKED BY:	LYX	SCALE: 1:1		PROJECTION	REV.: D
APPROVED BY:	LJP	DWG . PATH		0285-1	SHEET:2/4

出料方向
PULL OUT DIRECTEON

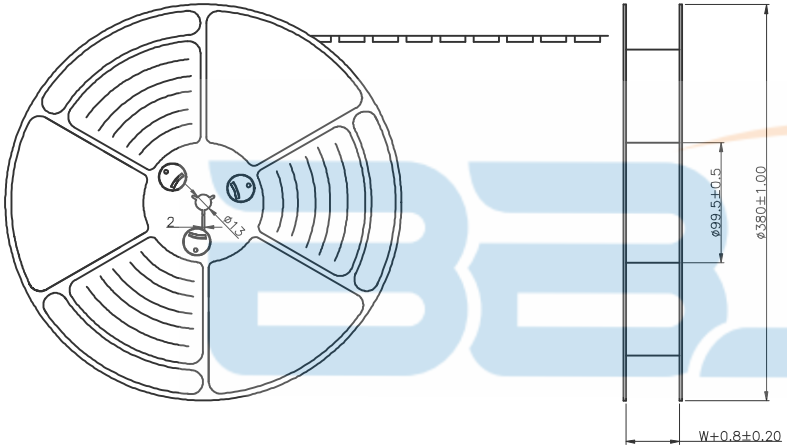

NOTES

1.帶子引導長度
LEAD TAPE LENGTH
出料方向
PULL OUT DIRECTEON

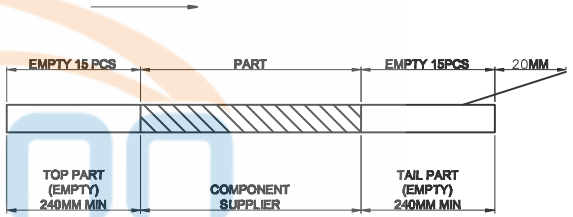

2. 出貨運輸過程中一定注意：
THIS REQUIREMENT SHOULD BE APPLIED AT SHIPMENT：
卷帶在運輸過程中不能散開
PEELING OFF SHOULD NOT BE ALLOWED DURING TRANSPORTATION

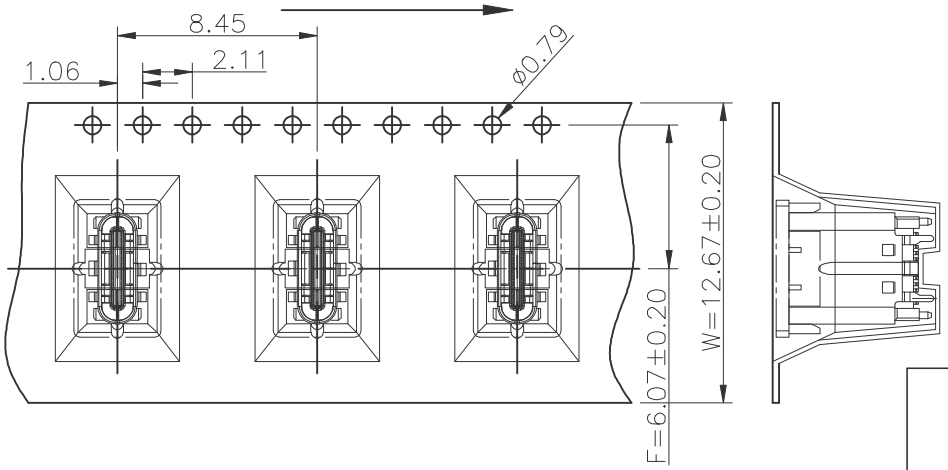

TOLERANCE UNSPECIFIED . ±0.50 .0 ±0.35 .00 ±0.25 .000 ±0.15 ANGLE ±3.00° CUSTOMER DRAWING		深圳市步步精科技有限公司			
		TITLE: TYPE-C 24P 母座 直立式 H=8.8			
DRAWN BY:	HMY	SIZE:A4	UNIT:mm	PART NO. UC.01.62-16-0003	
CHECKED BY:	LYX	SCALE: 1:1		PROJECTION	REV.: D
APPROVED BY:	LJP	DWG . PATH		0285-1	SHEET:3/4

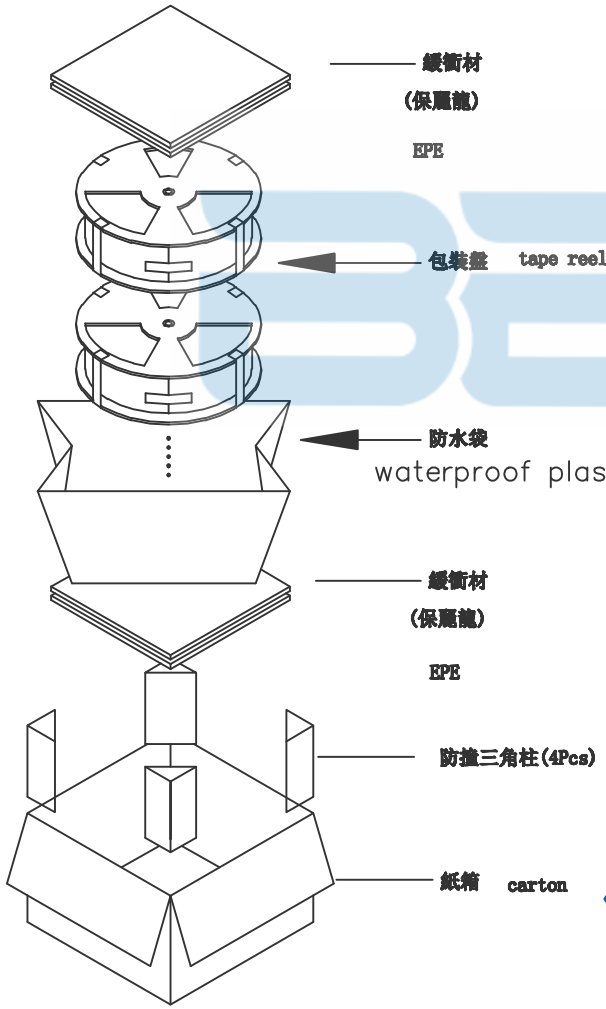

at small positioning hole of the carrier tape side).
標籤粘貼處 (朝捲裝包材的小定位孔一側)
Location of label sticking (label

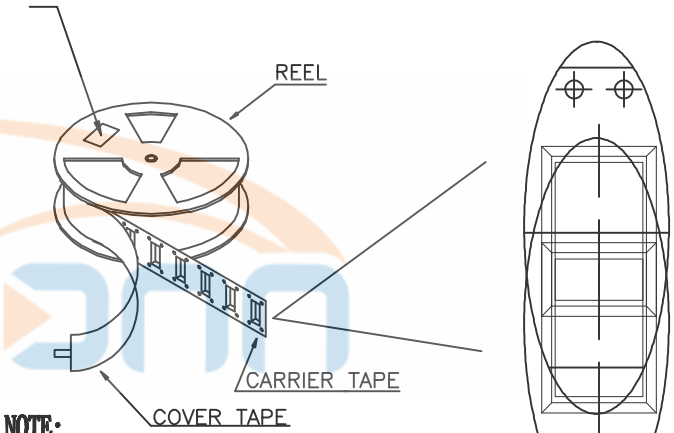

NOTE:

1. 每捲包裝數量及每箱裝箱數量如左下表格.
Packing q'ty of each reel & carton as below table shown.
2. 以上膠帶覆蓋下包裝帶經包裝機熱熔包裝
Use cover tape to cover and hot melt machine to seal up.
3. 每個紙箱放2個珍珠棉
Every carton use 2pcs EPE.
4. 將裝滿產品的卷盤放入紙箱并以膠帶封口
Put reels in the carton and use adhesive tape to seal up.

產品料號 (PRODUCT No.)	包裝容量 (PACKING CAPACITY)			重量 WEIGHT (Kg)		
	PCS/REEL	REELS/CARTON	PCS/CARTON	N.W./PCS	N.W./BOX	G.W./BOX
	450	8	3600			

TOLERANCE UNSPECIFIED
. ±0.50
.0 ±0.35
.00 ±0.25
.000 ±0.15
ANGLE ±3.00°
CUSTOMER DRAWING

深圳市步步精科技有限公司

TITLE: TYPE-C 24P 母座 直立式 H=8.8

DRAWN BY:	HMY	SIZE:A4	UNIT:mm.	PART NO	UC.01.62-16-0003
CHECKED BY:	LYX	SCALE: 1:1		PROJECTION	REV.: D
APPROVED BY:	LJP	DWG . PATH		0285-1	SHEET:4/4