QUARTZ CRYSTAL UNIT

*SERIES 7U, SEAM SEALED CERAMIC3.2*2.5MM SURFACE MOUNT PACKAGE*

深圳市晶科鑫实业有限公司

Shenzhen Crystal Technology Industrial Co., Ltd

APPROVAL SHEET

CUSTOMER P/N:			
TYPE:	SMD CRYSTAL		
DESCRIPTION:	SMD3225 13.598MHZ 10PF ±10PPM -40~85℃		
P N/ SJK:	7U13598E10UCG		
ENVIRONMENTAL:	■RoHS ■REACH ■HF □PAHS □other		
REVISION:	A1 2017-5-10	MOQ:	3000pcs/real
MSL:	Levels 1		

SIGNATURE					
SUPPLIER			CUSTOMER		
Issue	Check	Approve	QA	Check	Approve
SJK	18682088994 （Mr.Huang）		Signature		
FAE_EMAIL	sjk-fae@q-crystal.com		Date		
Date			Approve: □accept □unaccepted		
Note:					

1. TESTING CONDITION

Standard atmospheric conditions

Unless otherwise specified, the standard range of atmospheric conditions for making measurement
and tests are as follow:

Ambient temperature : 25±5℃

Relative humidity : 40%~70%

Measure equipment

Electrical characteristics measured by S&A250B or equivalent.

2. ELECTRICAL SPECIFICATIONS

Output Frequency Range	13.598MHz
Mode	AT/Fundamental
Frequency Tolerance	±10 ppm max (at 25°C)
Load Capacitance(C_L)	10 PF
Frequency Stability Over Operating Temperature Characteristics	±10ppm max
Operating Temperature Range	-40 °C to +85 °C
Storage Temperature Range	-40 °C to +125 °C
Shunt Capacitance (C_0)	3.0 PF Max
Driver Level (Typical)	10μW
Equivalent Series Resistance(ESR)	150Ω Max
Aging @25°C 1st year (Max)	±3ppm/year

3. DIMENSION (Units: mm)

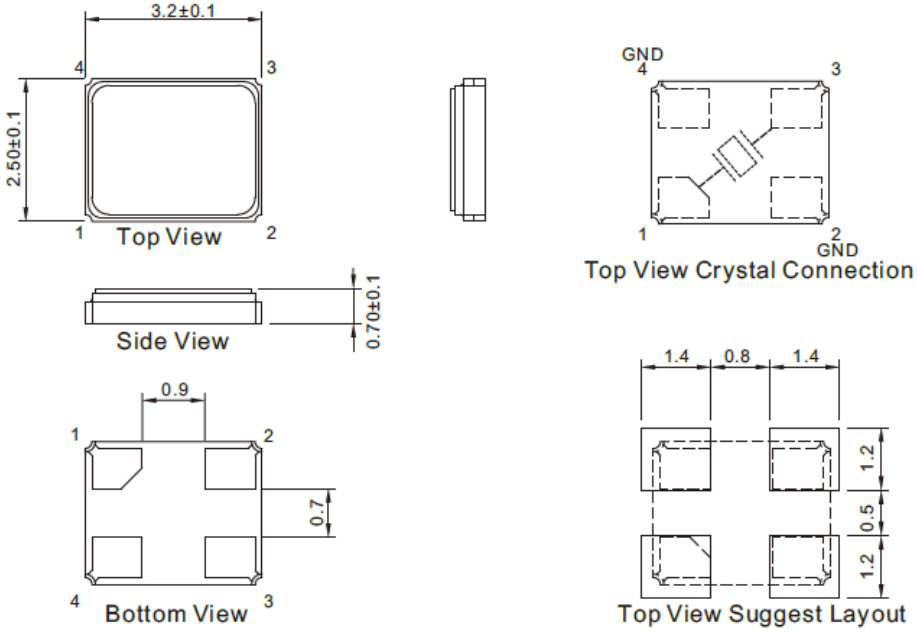

4. MARKING

5. REFLOW CONDITION

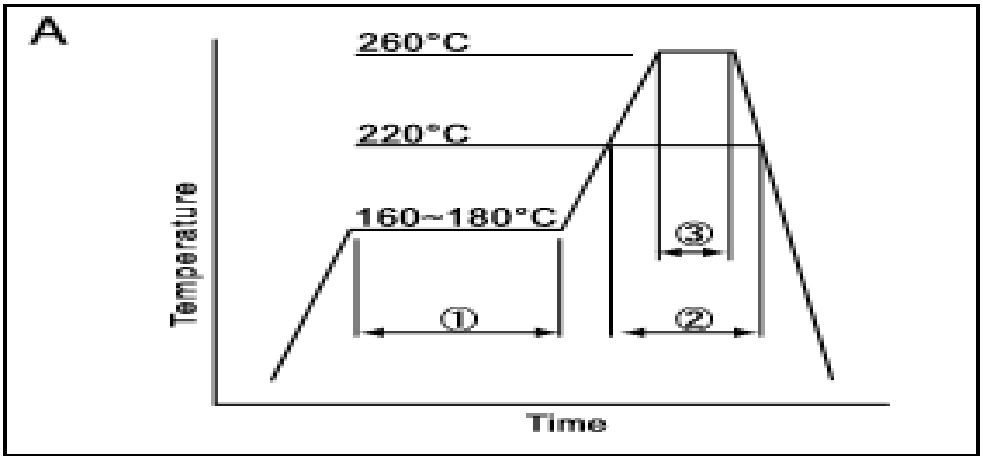

①	Preheat	160~180°C	120sec.
②	Primary heat	220°C	60sec.
③	Peak	260°C	10sec. max

6. RELIABILITY TEST SPECIFICATION

1.Mechanical Endurance

No.	Test Item	Test Methods	REF.DOC
1.1	Drop Test	150 cm height, 3 times on concrete floor.	JIS C6701
1.2	Mechanical Shock	Device are shocked to half sine wave (1000 G) three mutually perpendicular axes each 3 times. 0.5m sec. duration time	MIL-STD-202F
1.3	Vibration	Frequency range 10 ~ 2000 Hz Amplitude 1.52 mm/20G Sweep time 20 minute Perpendicular axes each test time 4 hours (Total test time 12 hours)	MIL-STD-883E
1.4	Gross Leak	Standard Sample For Automatic Gross Leak Detector, Test Pressure: 2Kg / cm2	MIL-STD-883E
1.5	Fine Leak	Helium Bombing 4.5 Kg/ cm2 for 2 hr	MIL-STD-883E
1.6	Solder ability	Temperature 245 ℃ ± 5℃ Immersing depth 0.5 mm minimum Immersion time 5 ± 1 seconds Flux Rosin resin methyl alcohol solvent (1 : 4)	MIL-STD-883E

2.Environmental Endurance

No.	Test Item	Test Methods	REF.DOC
2.1	Resistance To Soldering Heat	Pre-heat temperature 125 ℃ Pre-heat time 60 ~ 120 sec. Test temperature 260 ± 5 ℃ Test time 10 ± 1 sec.	MIL-STD-202F
2.2	High Temp. Storage	+ 125 ℃ ± 3 ℃ for 500 ± 12 hours	MIL-STD-883E
2.3	Low Temp. Storage	- 40 ℃ ± 3 ℃ for 500 ± 12 hours	MIL-STD-883E
2.4	Thermal Shock	Total 100 cycles of the following temperature cycle 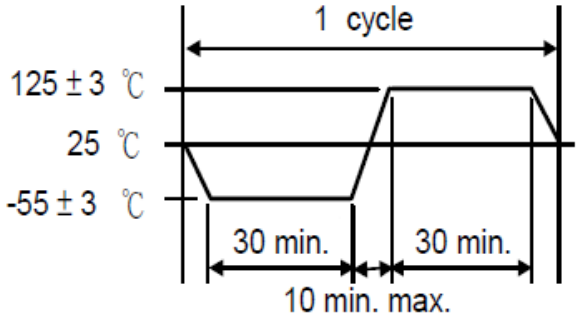 	MIL-STD-883E
2.5	High Temp & Humidity	85℃ ± 3℃, RH 85% , 500Hrs	JIS C5023
2.6	Pressure Cooker Storage	121 ± 3℃ , RH100% , 2 bar , 240Hrs	JIS C6701